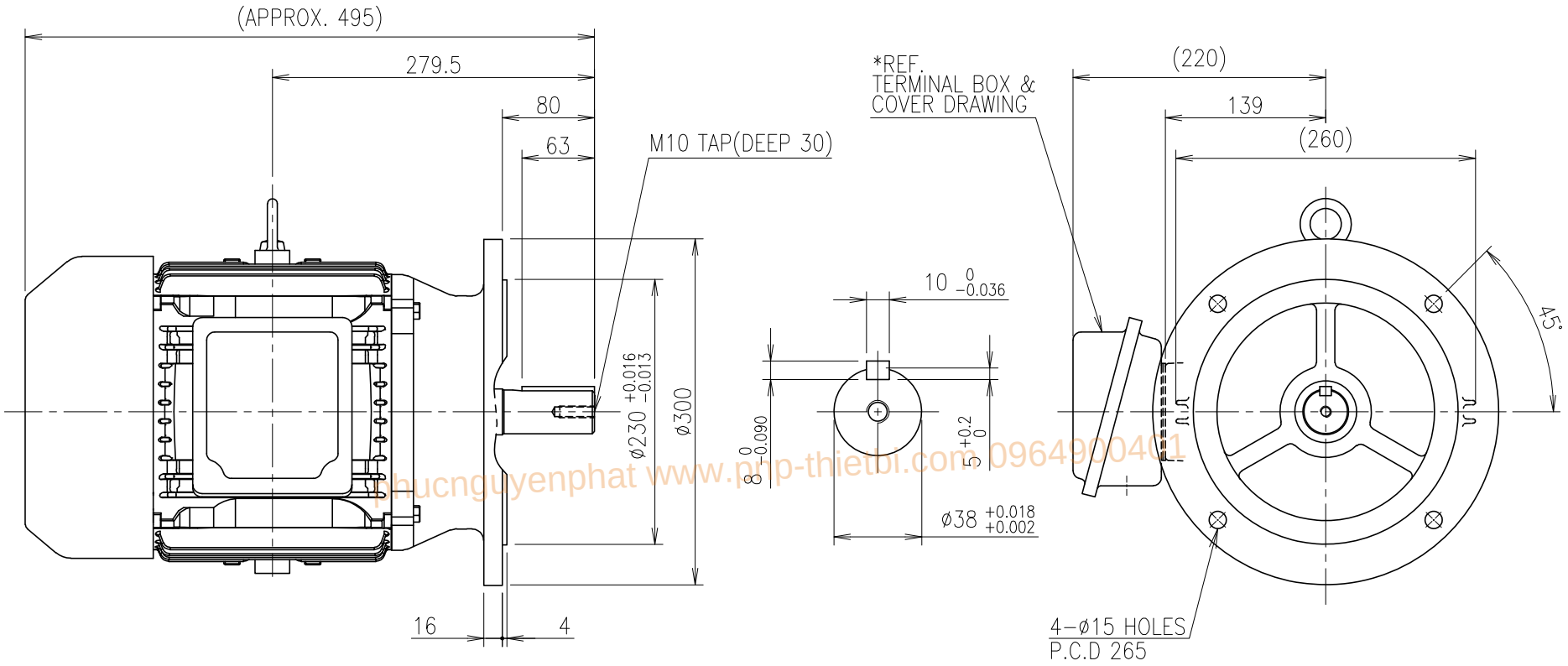

* SAM

phucnguyenphat www.pnp-thietbi.com 0964900401

<NOTE>

1) TOLERANCE OF HOLES CONFORMS TO H14 OF ISO 2768.
2) DIMENSIONS AND SHAPE COULD VARY UPON DESIGN CONCEPT (EXCEPT FOR IEC STANDARD).

No.	DATE	DESCRIPTION of REVISION

A4(297X210mm) FORM CE-14-0100-4A4 2013.11.20

HYOSUNG HEAVY INDUSTRIES

TYPE A.C MOTOR 132M

DWG NAME	저압 유도전동기 외형도 OUTLINE DIMENSIONS				
DWG No.	ES1AS58707			UNIT	mm
				SCALE	1:5.5
DESIGNED	CHECKED	REVIEWED	APPROVED	DATE	2020-10-23
2020.10.23 KANG HYO PARK	2020.10.27 JU HWAN SHIN		2020.10.27 TAE HYUN KIM	REVISION No.	00
				THIRD ANGLE PROJECTION	
REF. No.	–				C

The information written in this drawing is HYOSUNG HEAVY INDUSTRIES's property, and may not be disclosed and/or reproduced without the prior official permission of HYOSUNG HEAVY INDUSTRIES Corp.

이 도면에 표시된 정보는 효성중공업(주)의 소유이며 당사의 사전 서면동의 없이 무단사용을 금합니다.